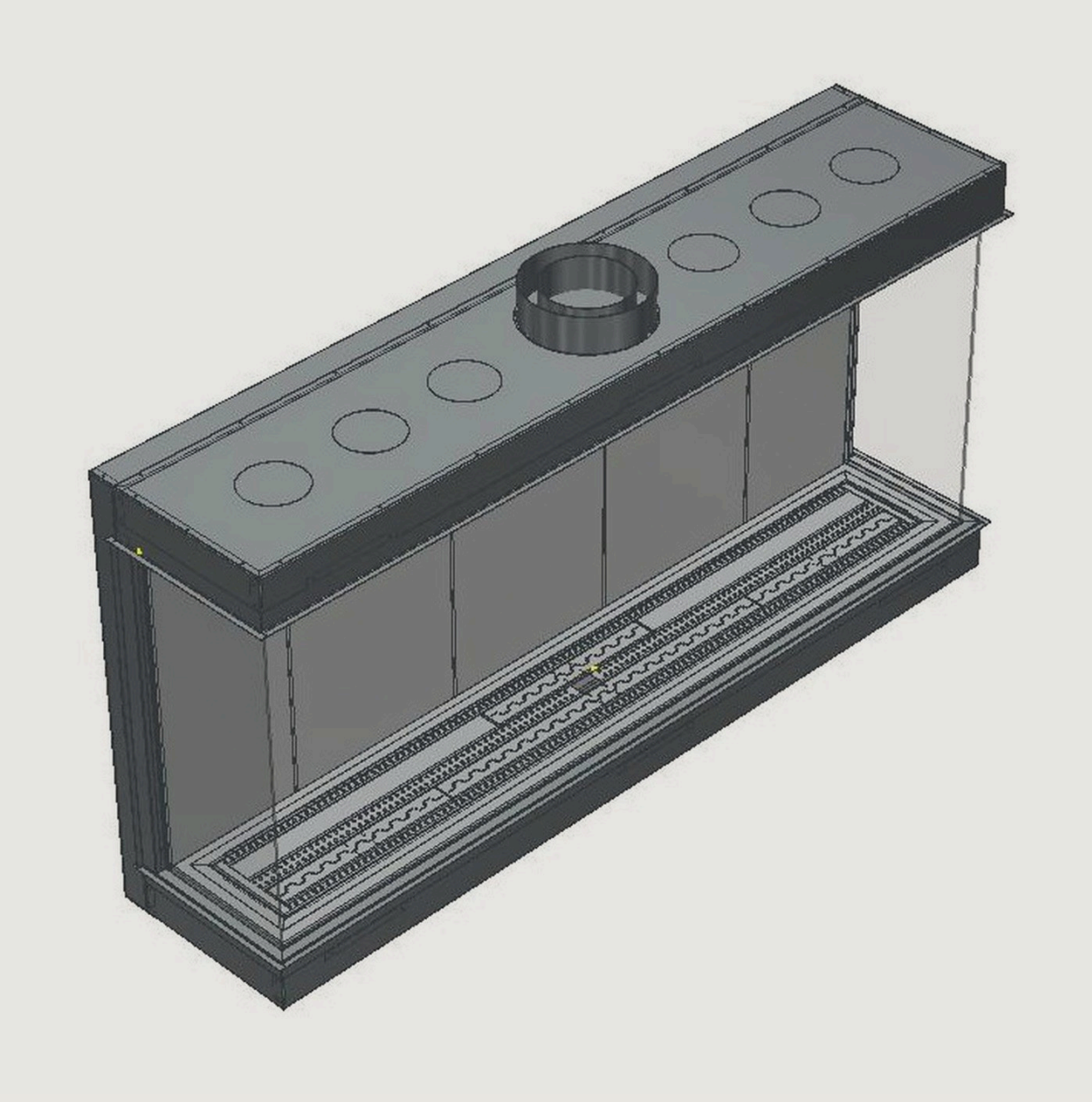

GAS FIREPLACE · SERIES FGH1

Installation manual

Installation · controls · safety · warranty

FUEGOLO

600 1000 1400 1800

Uno · Corner · Panorama · U-line · Vision

Fuegolo — the art of real fire

At Fuegolo, we believe that fire is more than warmth — it is an atmosphere, a design statement, and a place where people come together.

Our premium gas fireplaces are created for modern living spaces, combining elegant design, high-quality materials and the beauty of a real flame.

We focus on developing fireplaces that integrate seamlessly into contemporary walls, furniture and architectural interiors. Every detail is carefully considered, from the precision of the burner construction to the clean and sophisticated appearance of the flame.

Designed for modern spaces

Fuegolo gas fireplaces are designed to give architects, interior designers, fireplace manufacturers and homeowners the freedom to create unique fire features. Available in different sizes and configurations, our fireplaces can be incorporated into a wide range of custom applications while maintaining a refined and minimalist appearance.

Quality & attention to detail

We are committed to using carefully selected materials and reliable manufacturing processes to deliver products designed for consistent performance and long-term use. Our goal is simple: to combine technology, craftsmanship and design to create a better way to experience fire.

Our vision

To make premium fire design accessible to modern architecture and interior design, while maintaining the elegance, simplicity and authenticity of a real flame.

Fuegolo
Premium gas fire — designed to inspire.
Designed in Spain

Contents

01 Installation p. 04

02 Control systems p. 05

03 FGR-1 / FGT-1 remote p. 06

04 FGR-2 / FGT-2 remote p. 07

05 Dimensions p. 09

06 Safety — caution and warning p. 13

07 Conditions and warranty p. 14

Before you start

Read this manual completely before installing and using the appliance, and keep it for future reference. The fireplace must be installed by a competent, qualified gas installer, in accordance with the rules and regulations applicable in the country (or region) of installation and with this manual.

Installation

GENERAL

- The fireplace must be installed by a competent, qualified gas installer, in accordance with the rules and regulations applicable in the country (or region) of installation and with this manual.
- Before operating, verify that no gas is present in the area around the appliance, including near the floor.
- Do not disassemble the gas valve; it contains no serviceable components. Attempted disassembly or repair of controls can cause property damage, severe injury or death.
- Wiring of the valve and the receiver must be completed before starting ignition. Failure to do so could damage the electronics.
- Do not use the control or any gas appliance if any part has been under water or in contact with water. Immediately call a qualified service technician to replace the control system and any gas control system that has been under water.
- Use only your hand to push in or turn the gas control knobs. Never use tools.

INSTALLATION DATA

Gas valve (LP version)	FGV-LP, for 6 V system
Gas connection (inlet / outlet)	3/8" NPT or 1/2" NPT
Maximum inlet pressure (LP)	0.5 psi (34 mbar)
Gas supply pressure (LP)	12" WC (30 mbar)
Burner outlet pressure (LP)	4.5" - 10" WC (11.2 - 24.9 mbar)
Valve regulation range (LP)	5,000 - 120,000 BTU/h (1.5 - 35 kW)
Pilot outlet / pilot injector (LP)	7/16"-24 UNS / 0.30 mm
Valve ambient temperature	-24 °C to 80 °C (-10 °F to 175 °F)
Minimum safety distance to flammable materials	50 cm (20 in)

FLUE DIAMETER

Size	Single burner	Split line burner	Dual independent burner
600	130-200 mm	—	130-200 mm
1000	130-200 mm	130-200 mm	—
1400	130-200 mm	130-200 mm	130-200 mm
1800	150-250 mm	—	180-250 mm

— = burner option not available for this size.

Control systems

FUEGOLO

FGR-1 system

Receiver FGR-1

Remote FGT-1

FGR-2 system

Receiver FGR-2

Remote FGT-2

Technical data	FGR-1 + FGT-1	FGR-2 + FGT-2
Used with	All models	All models
Radio frequency	434 MHz	434 MHz
Remote handset batteries	3 x 1.5 V "AAA" (quality alkaline recommended)	3 x 1.5 V "AAA" (quality alkaline recommended)
Receiver batteries	—	4 x 1.5 V "AA" (quality alkaline recommended)
AC mains adapter	Required: outlet 6 V DC, 1.5 A (for light dimmer, AUX and other functions)	Optional; only an adapter approved by the manufacturer

Note: every model is available with FGR-1 or FGR-2 (see receiver label). Not interchangeable with previous versions.

SETTING THE ELECTRONICS CODE (FIRST TIME USE ONLY)

A code is selected automatically for all electronics from among 65,000 random codes available. The receiver has to learn the code of the handset.

FGR-1 / FGT-1

- Slide the ON/OFF/REMOTE slide switch on the receiver from OFF to REMOTE mode.
- Press the pairing button on the receiver; you will hear an acoustic signal and the green LED will flash.
- Within the next 10 seconds, press the power button on the remote handset until you hear two (2) beeps confirming the code is set.

FGR-2 / FGT-2

- Switch the receiver from O to II (remote mode).
- Slide to open the cover of the receiver.
- Press the receiver's learn button; you will hear an acoustic signal and the green LED will flash.
- Within the next 10 seconds, press the power button on the remote handset until you hear two (2) beeps confirming the code is set.

Note: this is a one-time setting only and is not required when changing the batteries in the remote or the receiver.

CERTIFICATION

Control systems FGR-1 / FGT-1 and FGR-2 / FGT-2: CSA, FCC and CE marks. Radio frequency 434 MHz for Europe. **Gas valve:** CSA labelling.

This device complies with part 15 of the FCC Rules. Operation is subject to the following two conditions: (1) this device may not cause harmful interference, and (2) this device must accept any interference received, including interference that may cause undesired operation. Changes or modifications not expressly approved by the party responsible for compliance could void the user's authority to operate the equipment.

FGR-1 / FGT-1 remote

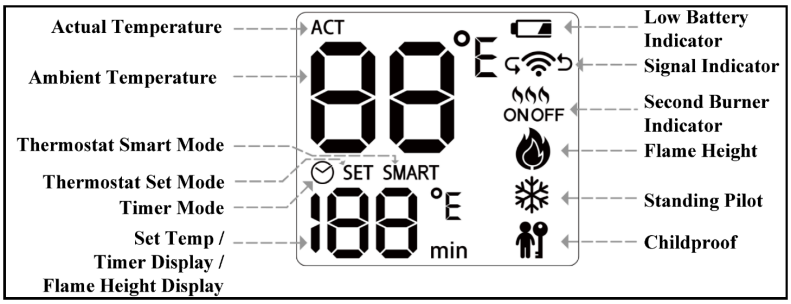

SETTING THE TEMPERATURE SCALE

After the batteries are installed, choose Fahrenheit or Celsius using the slide switch in the battery compartment. The actual temperature is then shown on the standby screen.

TURN ON THE FIRE

Press the power button. A transmission symbol appears on the display and the receiver confirms with an acoustic signal.

- The main burner and the second burner turn on once pilot ignition is confirmed.
- The main gas goes to maximum flame height first, then to the last flame height memory.
- The handset automatically goes into manual mode after main burner ignition.

TURN OFF THE FIRE

Press the power button; the receiver confirms with an acoustic signal.

Note: there is a 3 second delay before the next ignition is possible.

CHILDPROOF

On: press the up and down buttons simultaneously. The childproof symbol is shown and the handset is inoperable, including the off function. Off: press the up and down buttons simultaneously again; the symbol disappears.

Notice — Wiring of valve and receiver must be completed before starting ignition. Failure to do so could damage the electronics.

Notice — The FGR-1 receiver requires an AC mains adapter with outlet 6 V DC, 1.5 A for the light dimmer, AUX and other powered functions.

CHANGING THE MODE OF THERMOSTAT

While the appliance flame is on, briefly pressing the thermostat button changes the mode in the following order:

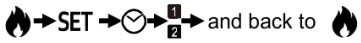

A transmission symbol appears while pressing the button; the receiver confirms with an acoustic signal.

SET MODE

Room temperature is measured at the handset and compared with the set temperature. The flame height is modulated between the last setting and off to achieve the set temperature. Press the up or down button to change the set temperature.

Default set temperature: 72°F (22°C). Range: 45°F (7°C) to 95°F (35°C).

At an ambient temperature of 50°F (10°C) or lower, LO is displayed; the handset still operates all functions except displaying the ambient temperature. At 99°F (37°C) or higher, HI is displayed and the handset transmits a shutdown signal to the appliance.

TIMER MODE

At the end of the countdown period the fire turns off. While the standing pilot symbol is shown, the fire remains at pilot flame instead. Time period: 15 to 180 minutes. Press and hold the thermostat button to check the timer setting; use the up or down button to change it. To cancel the thermostat function, press the down button until the set temperature shows "--".

SET and timer modes keep separate set temperature memories; flame height always returns to its last setting.

SLEEP MODE AND BATTERIES

The handset enters sleep mode after 1 minute idle. A low battery symbol is shown when the batteries need replacing; replace them at the beginning of each heating season. Do not use metal tools to remove batteries: a short circuit could damage the receiver.

FGR-2 / FGT-2 remote

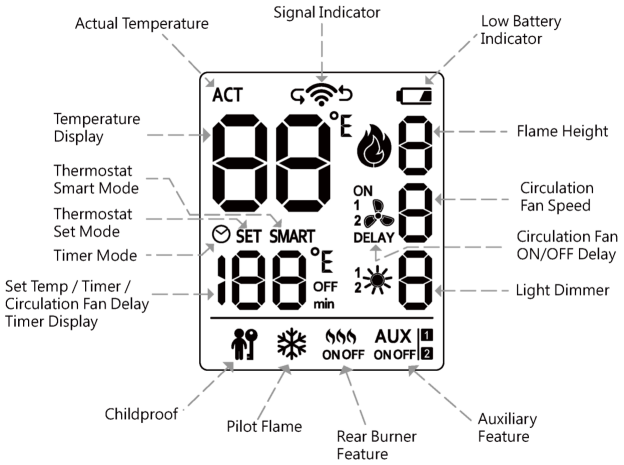

SETTING THE TEMPERATURE UNIT

Install the batteries in the handset, then press the up or down button to choose Fahrenheit or Celsius. The actual temperature is then shown on the standby screen.

TURN ON THE FIRE

Press and hold the power button for 3 seconds; one short beep confirms that the start sequence has begun.

- The main burner and the rear burner turn on once pilot ignition is confirmed.
- The main gas goes to maximum flame height first, then to the last flame height memory.
- The handset automatically goes into manual mode after main burner ignition.

FLAME HEIGHT ADJUSTMENT

Up button: increase flame height (maximum 5). Down button: decrease flame height (minimum 1).

Note: after an adjustment, leave the handset idle for 5 seconds or press the MODE button to transmit.

TURN OFF THE FIRE

Press the power button; one short beep and the fire turns off.

Note: there is a 3 second delay before the next ignition is possible.

PILOT FLAME

Press and hold the thermostat button and the down button to put the appliance into pilot flame; the standing pilot symbol is shown. Repeat to deactivate; the symbol disappears.

Note: pilot flame can be activated or deactivated manually except in SMART mode.

CHILDPROOF

On: press the up and down buttons simultaneously. The childproof symbol is shown and the handset is inoperable, including the off function. Off: press the up and down buttons simultaneously again; the symbol disappears.

REAR BURNER

Press the MODE button until the rear burner symbol flashes. Up button: on. Down button: off. Default: on.

Notice — Wiring of valve and receiver must be completed before starting ignition. Failure to do so could damage the electronics.

Warning — When pilot ignition is confirmed, the main flame valve turns on to maximum flame height.

FGR-2 / FGT-2 remote

FUEGOLO

CHANGING THE MODE OF THERMOSTAT

While the flame is on, briefly pressing the thermostat button changes the mode in this order: flame (manual) → SET → timer → back to flame. A transmission symbol appears and the receiver confirms with an acoustic signal.

SET MODE

Room temperature is measured at the handset and compared with the set temperature. The flame height is modulated between the last setting and off. Press the up or down button to change the set temperature.

Default set temperature: 22°C (72°F). Range: 7°C (45°F) to 35°C (95°F).

At 10°C (50°F) or lower, LO is displayed. At 37°C (99°F) or higher, HI is displayed and the handset transmits a shutdown signal to the appliance.

TIMER MODE

At the end of the countdown period the fire turns off; while the standing pilot symbol is shown, the fire remains at pilot flame. Time period: 15 to 180 minutes. Press and hold the thermostat button to check the timer setting; use the up or down button to change it. To cancel the thermostat function, press the down button until the set temperature shows "--".

SET and timer modes keep separate set temperature memories; flame height always returns to its last setting.

SLEEP MODE

After 1 minute idle the handset enters sleep mode. Except the fan, light and AUX buttons, all buttons wake the handset.

LOW BATTERY AND BATTERY REPLACEMENT

A low battery symbol is shown when the batteries need replacing. Replace them at the beginning of each heating season. Do not use metal tools to remove batteries: a short circuit could damage the receiver.

CIRCULATION FAN

Press the fan button until the fan symbol flashes. Up button: increase fan speed (maximum 3). Down button: decrease fan speed (minimum 0).

To set the fan delay, press the up and down buttons simultaneously. Up button: fan delay ON time, 0 to 12 minutes; the fan starts after this delay following successful ignition (0 = immediately). Down button: fan delay OFF time, 0 to 12 minutes; the fan stops after this delay once the appliance is off (0 = immediately).

LIGHT

Press the light button until the light symbol flashes. Up button: increase dimmer (maximum 3). Down button: decrease dimmer (minimum 0). Default: 0.

AUX

Press the AUX button until the AUX symbol flashes. Up button: on. Down button: off. Default: off.

OFF MODE — AVAILABLE FUNCTIONS

While the appliance is off, briefly pressing the fan, light or AUX button selects that function; a transmission symbol appears and the receiver confirms with an acoustic signal.

- Fan: during the fan delay-off countdown, press the down button to switch the fan off. If the fan is off it cannot be switched on unless the appliance is switched on.
- Light: up / down buttons change the dimmer (maximum 3, minimum 0).
- AUX: up button on, down button off.

Dimensions 600

Uno 600

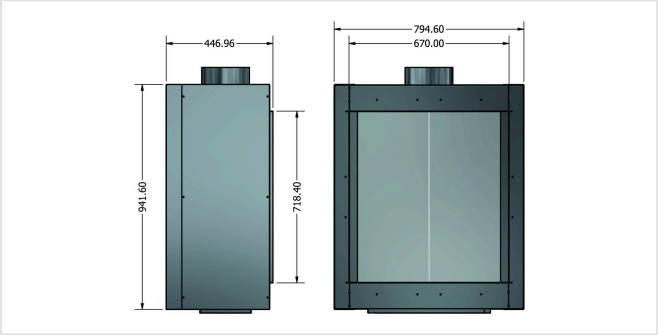

Corner 600

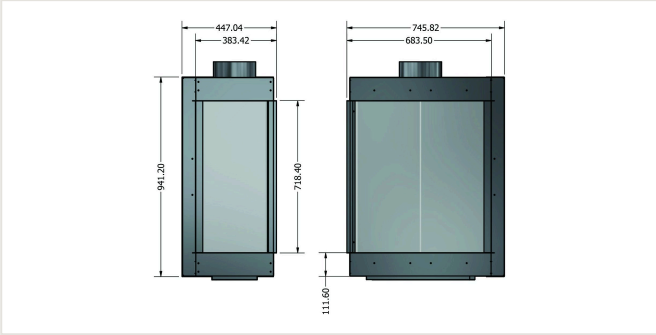

Panorama 600

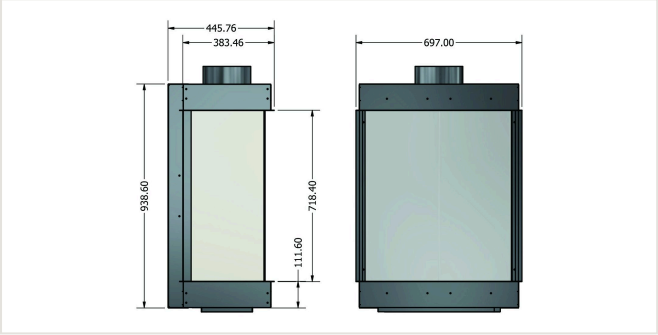

U-line 600

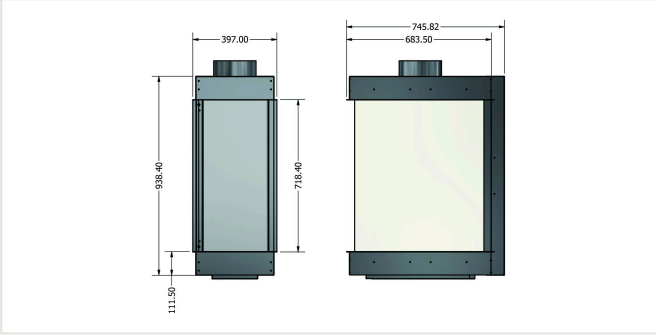

Vision 600

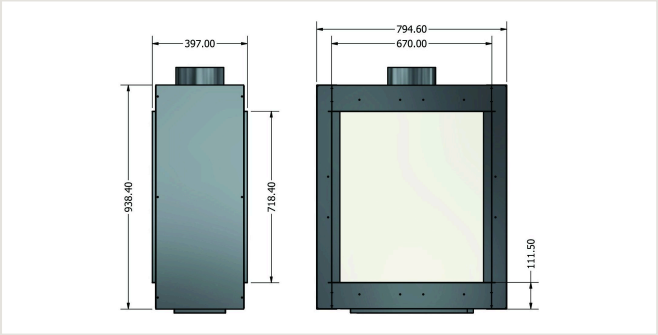

BURNER DATA — FGH1 600 (ALL CONFIGURATIONS)

Burner	Natural gas range	Propane range	Direct heat output	Flue diameter
Single burner	2.4 - 5.9 kW	2.7 - 6.3 kW	6.3 kW	130-200 mm
Dual independent	2.4 - 11.8 kW	2.7 - 12.6 kW	12.6 kW	130-200 mm

Dimensions in mm. Full data in the FGH1 catalogue.

Dimensions 1000

Uno 1000

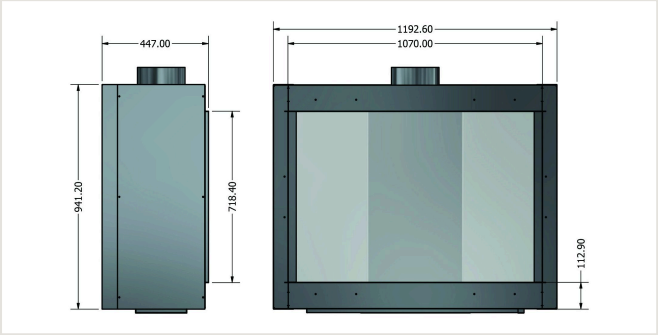

Corner 1000

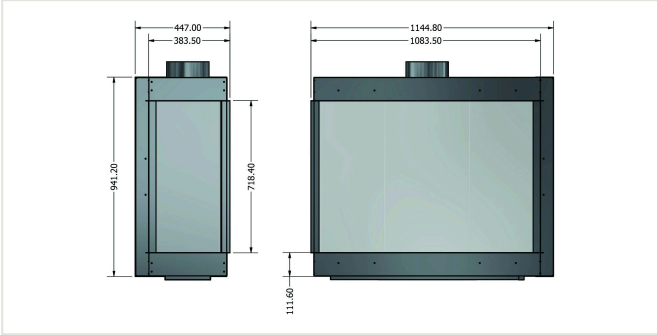

Panorama 1000

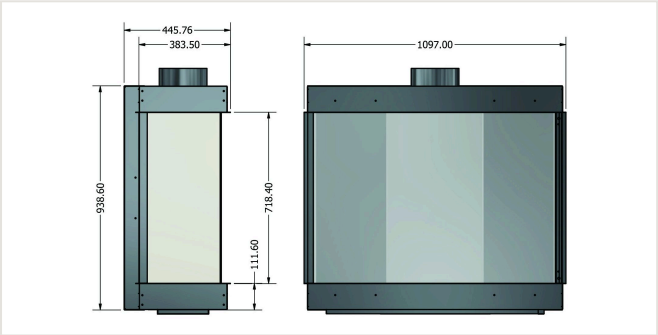

U-line 1000

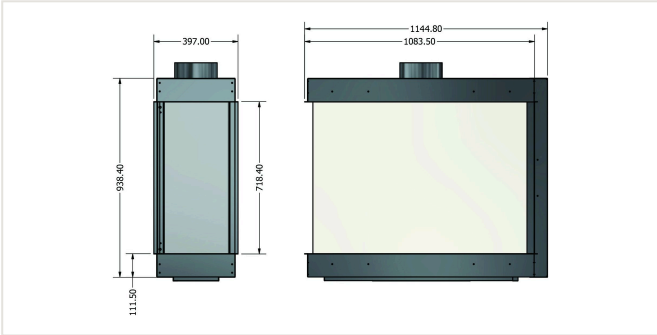

Vision 1000

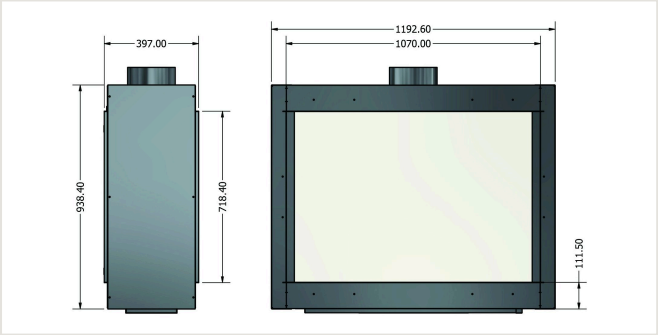

BURNER DATA — FGH1 1000 (ALL CONFIGURATIONS)

Burner	Natural gas range	Propane range	Direct heat output	Flue diameter
Single burner	4.3 - 10.5 kW	4.8 - 11.6 kW	11.6 kW	130-200 mm
Split line	4.3 - 16.4 kW	4.8 - 17.9 kW	17.9 kW	130-200 mm

Dimensions in mm. Full data in the FGH1 catalogue.

Dimensions 1400

Uno 1400

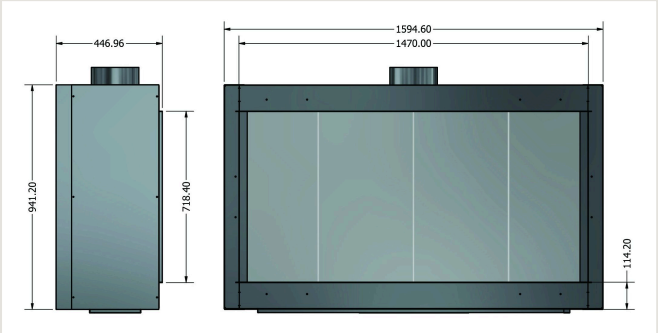

Corner 1400

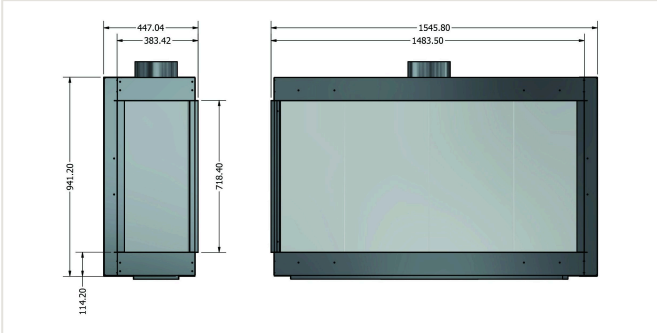

Panorama 1400

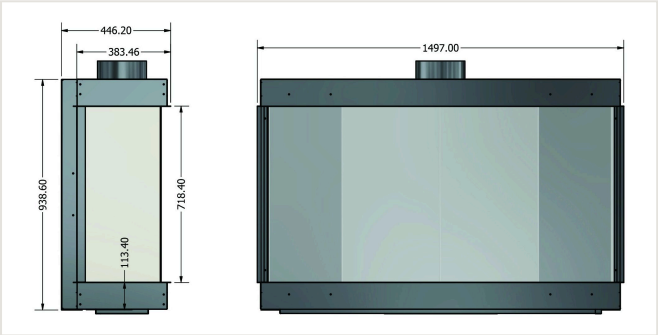

U-line 1400

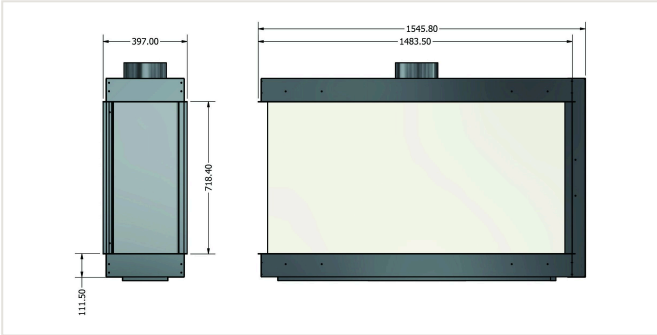

Vision 1400

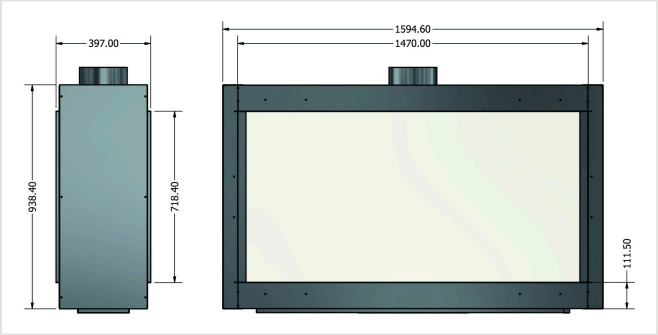

BURNER DATA — FGH1 1400 (ALL CONFIGURATIONS)

Burner	Natural gas range	Propane range	Direct heat output	Flue diameter
Single burner	6.2 - 15.3 kW	6.6 - 16.2 kW	16.2 kW	130-200 mm
Split line	6.2 - 21.2 kW	6.2 - 22.5 kW	22.5 kW	130-200 mm
Dual independent	2.4 - 22.1 kW	2.7 - 23.7 kW	23.7 kW	130-200 mm

Dimensions in mm. Full data in the FGH1 catalogue.

Dimensions 1800

Uno 1800

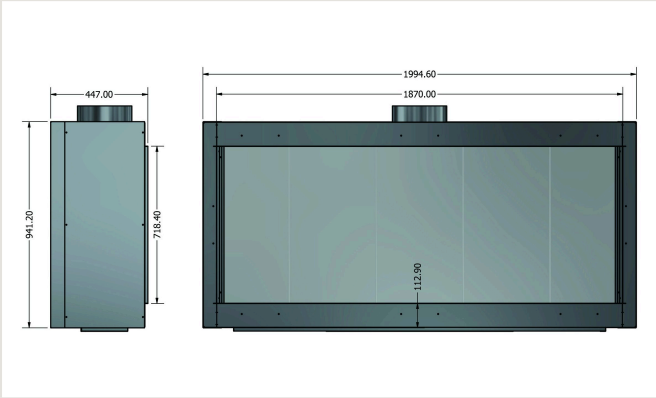

Corner 1800

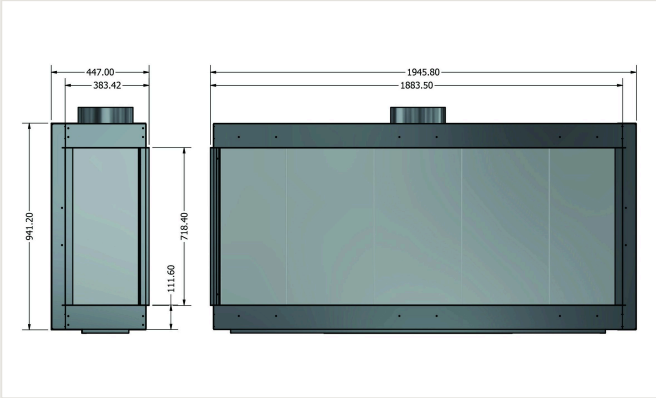

Panorama 1800

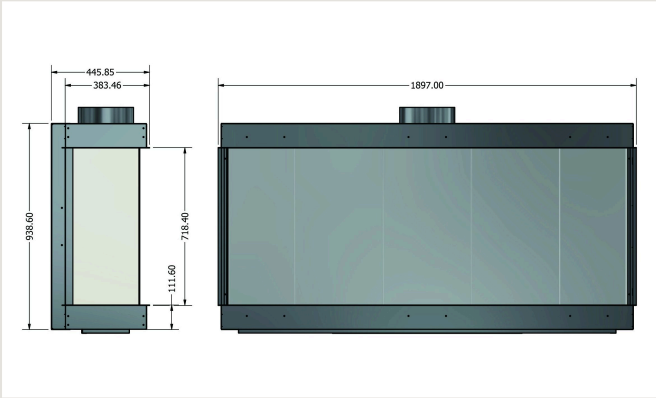

Vision 1800

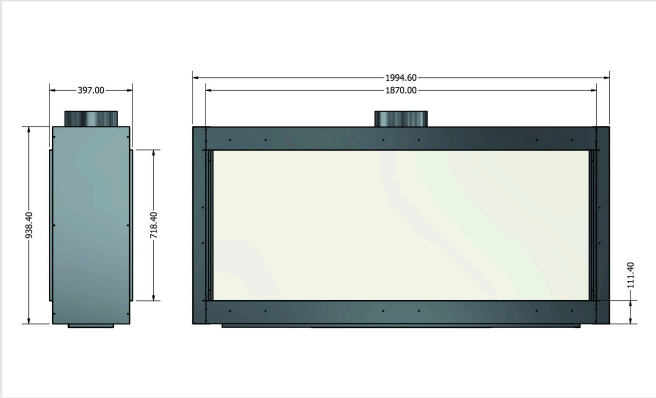

BURNER DATA — FGH1 1800 (ALL CONFIGURATIONS)

Burner	Natural gas range	Propane range	Direct heat output	Flue diameter
Single burner	7.9 - 19.9 kW	8.4 - 20.9 kW	20.9 kW	150-250 mm
Dual independent	4.3 - 24.2 kW	4.8 - 25.3 kW	25.3 kW	180-250 mm

Dimensions in mm. Full data in the FGH1 catalogue.

Safety

FUEGOLO

Caution

1. The fireplace, its glass and the surrounding surfaces get very hot during operation. Do not touch the fireplace while burning. Allow the appliance to cool down completely after the flame is extinguished before touching it.
2. Risk of burns. Do not operate the fireplace without completed assembly.
3. Due to high surface temperatures, keep children, pets, clothing and furniture away.
4. Do not place any flammable material within 50 cm (20 inches) of the fireplace.
5. Keep face and other body parts away from the fireplace during operation, especially during ignition.
6. Do not use the appliance to heat or boil water or as a cooking appliance.
7. Keep the remote handset out of the reach of children. Use the childproof function when the fireplace is not in use.

Warning

1. Risk of fire or explosion. Attempted disassembly or repair of controls can cause property damage, severe injury or death. Do not disassemble the gas valve; it contains no serviceable components.
2. Read these instructions carefully. Failure to follow them could result in a fire or explosion causing property damage, personal injury, or loss of life. The product must be installed and operated according to all local regulations.
3. Before operating, verify that no gas is in the area around the appliance, including near the floor.
4. Use only your hand to push in or turn the gas control knobs. Never use tools. If a knob will not push in or turn by hand, do not try to repair it; call a qualified service technician. Force or attempted repair may result in a fire or explosion.
5. Do not use this control or any gas appliance if any part has been under water or in contact with water. Immediately call a qualified service technician to replace the control system and any gas control system which has been under water or in contact with water.
6. Never use the appliance in areas where flammable vapours may be present.
7. Do not obstruct the burner or the venting of the appliance. Use only decorative material prescribed by Fuegolo on the burner bed.

What to do if you smell gas

- Do not light any appliance.
- Immediately call the gas supplier from a neighbour's phone. Follow the gas supplier's instructions.
- Do not touch any electrical switch; do not use any phone in your building.
- If you cannot reach the gas supplier, call the fire department.

Conditions and warranty

1 **Coverage.** Fuegolo guarantees its gas fireplaces against defects in materials and workmanship. The warranty applies only if the appliance has been installed by a qualified gas installer, in line with this manual and with the laws and regulations of the country or region where it is used.

2 **Warranty period.** All Fuegolo appliances carry a two-year warranty, counted from the date of purchase. The purchase invoice must show this date and serves as proof of purchase.

3 **Remedy.** If a defect covered by this warranty appears during the warranty period, Fuegolo will supply a replacement part free of charge to the installer or dealer. Costs for removal, refitting, travel and transport are not covered.

4 **Claims.** In case of a fault, contact the installer or dealer first. The appliance or any parts may be returned only after agreement with Fuegolo, together with the invoice and a description of the fault.

5 **Exclusions.** The warranty does not cover:

- The ceramic glass.
- Damage caused during transport, storage or assembly, and any physical or chemical influence from outside.
- Batteries of the remote control and the receiver.
- Damage resulting from incorrect installation, adjustment, use or maintenance, or from not following this manual.
- Modifications or repairs that have not been approved by Fuegolo in advance, including opening the gas valve.
- Use of decorative material, parts or materials other than those specified in this manual.
- Use of a gas type or supply pressure other than those specified for the appliance.

6 **Service outside the warranty.** After the warranty period, or when a claim is not covered, material, labour and travel costs will be charged.

7 **Legal rights.** This warranty does not affect any rights that a consumer has under mandatory law.

2 years
warranty from date of purchase

Invoice
proof of purchase

Gas installer
qualified installer required

FUEGOLO

Pure flame. Pure design. Pure freedom.

Designed in Spain

fuegolo.com · 0034 664 890098